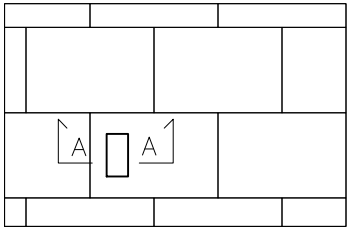

Integration of downlight

is possible as long as the integration is suitable for the thickness of the panel.
If the system needs to to bear a load < 1,5kg, no reinforcement is needed.
If the system needs to bear a load > 1,5 kg, reinforcement is mandatory. Reinforcement can be achieved by using two Chicago Metallic Monolithic furring channels on each side of the integration, turn them upside down and screw fix them to the main runner.
Joint filling: filler –> tape –> filler –> Elegant Render

1. Rockfon® Mono® Acoustic panel
2. Chicago Metallic™ Monolithic main runner T35
3. Chicago Metallic™ Monolithic cross furring channel
4. Nonius Hanger
5. Standard screw
6. Fastening washer
7. Intersection Bracket
8. Rockfon® Mono® Acoustic Tape
9. Rockfon® Mono® Acoustic Filler
10. Rockfon® Mono® Acoustic Elegant Render
11. Suitable metal or similar yoke
12. Suitable Downlight (based on panel thickness)

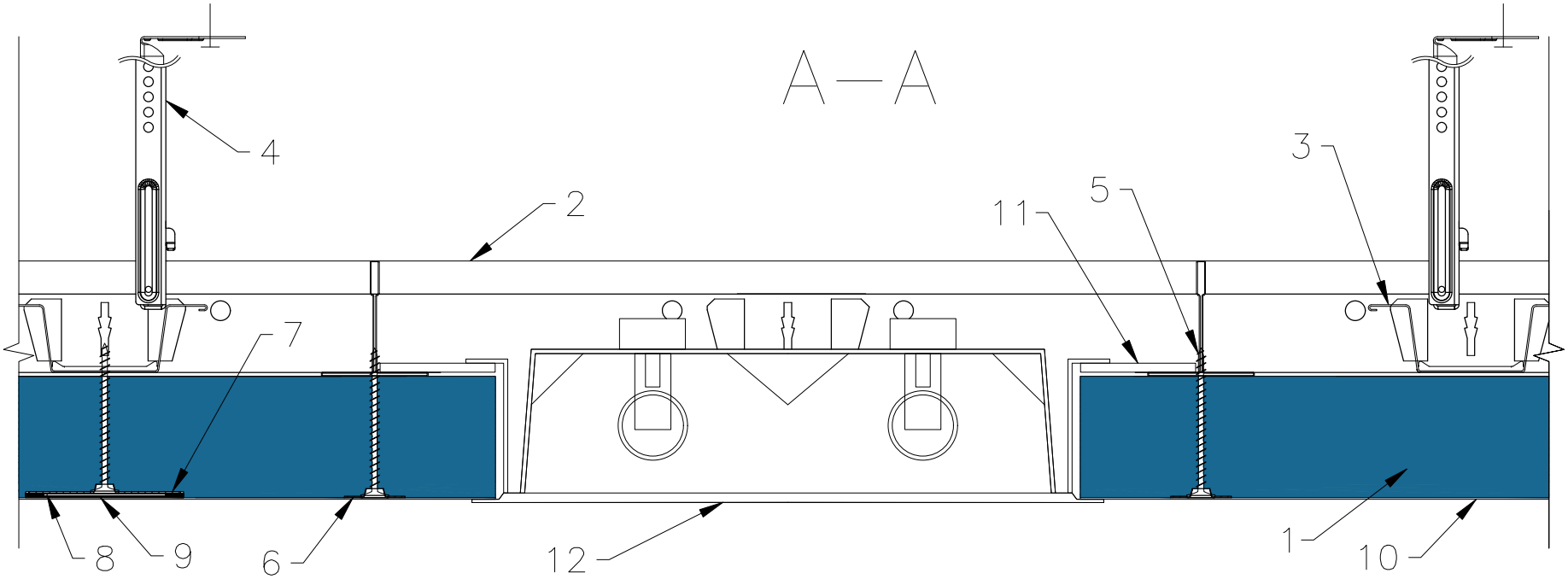

All screws and other fastenings shown are indicative and illustrative only.
Specific fasteners should be chosen dependent on substrates and materials being used.

Information:	Date:	Drawing Type:	
Rockfon Mono FE Armature integration detail Downlight integration	05–03–2024	TECHNICAL	
	Drawing No.: SCA–02–T35–FE–32	Drawn by: OPTS	Scale: 1:2
We kindly draw your attention to the fact that the above drawings should be considered as guidelines and therefore are without responsibility on the part of Rockfon.	Contact information: info@rockfon.dk	Revision No.: 1	

Rockfon®